Magnetic Specialties, Inc.
9812 S.E. Empire Ct.
Clackamas, OR 97015

Phone: 971-206-2000
Toll Free: 800-547-6353
Fax: 971-206-2001

SIDE TILT SEPARATORS

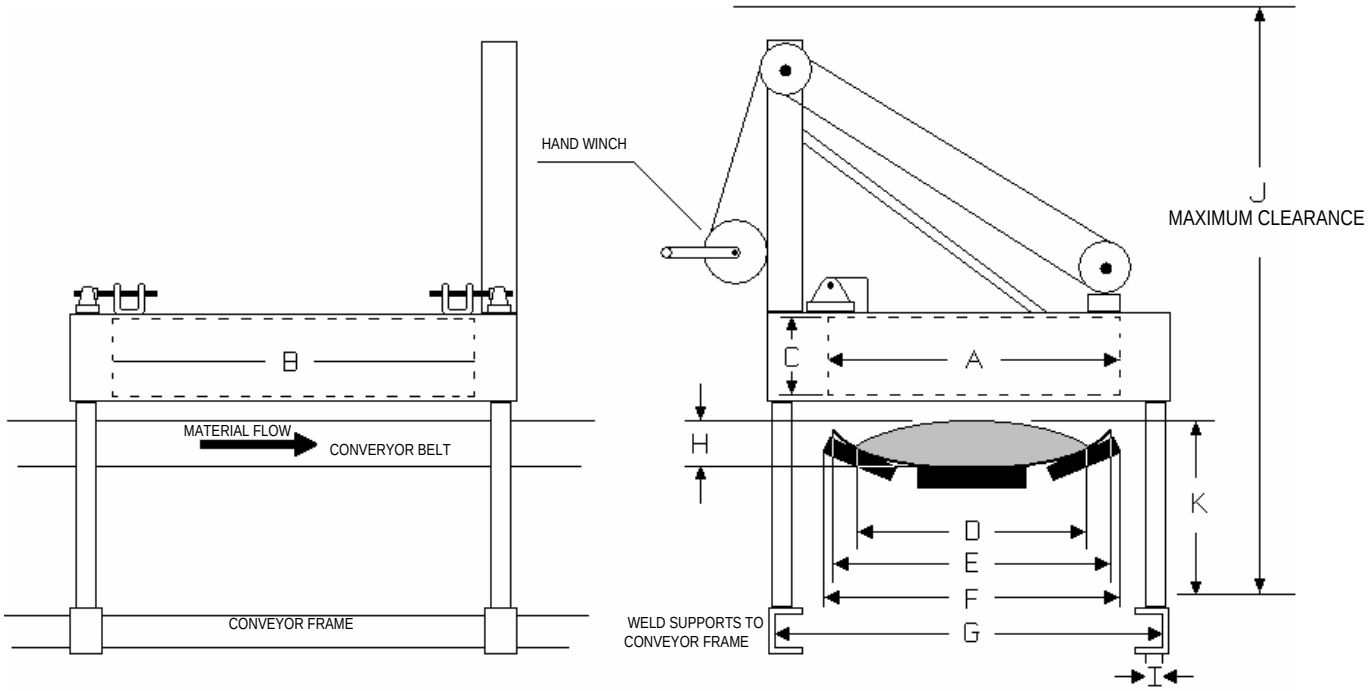

				DIMENSIONS SUPPLIED BY CUSTOMER							
MODEL	A	B	C	D	E	F	G	H	I	J	K